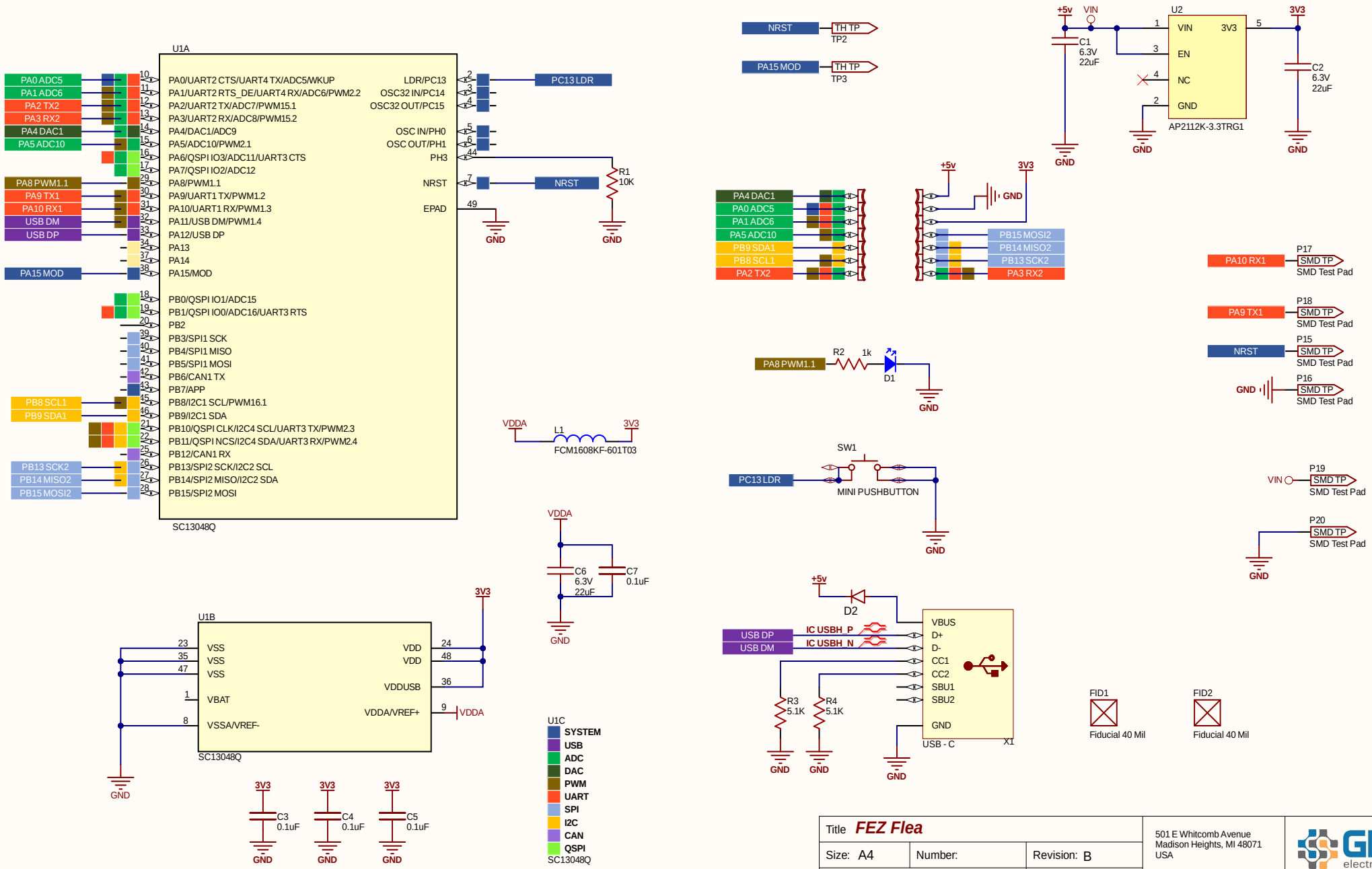

Title	**FEZ Flea**		501 E Whitcomb Avenue Madison Heights, MI 48071 USA
Size: A4	Number:	Revision: B	
Date: 19/04/2021		Sheet 1 of 1	
File: C:\GitHub\GHI-Hardware\Altium-Projects\SBC\FEZ-Flea\FEZ-Flea.SchDoc			